DET-2012 (1st sem of 3 yrs Diploma course)
Set Code - 4

PART—I

(PHYSICS)

Note : (Take $g = 9.8\ m/s^2$)

1. A person of 60 kg wt carrying a load of 60 kg takes 2 minutes to reach the top of a building of height 6 m by walking in a staircase. What is the power of the person ?

(A) 29.4 W

(B) 58.8 W

(C) 882 W

(D) 1764 W

2. In which of the following cases the inertia of rest of a body is measured ?

(A) Speed

(B) Acceleration

(C) Mass

(D) Power

ଦ୍ରଷ୍ଟବ୍ୟ : ($g = 9.8\ m/s^2$ ବୋଲି ଧରି ନିଅ)

1. 60 kg wt ବିଶିଷ୍ଟ ଜଣେ ବ୍ୟକ୍ତି 60 kg ର ଏକ ବୋଝ ମୁଣ୍ଡାଇ ସିଡ଼ି ପାହାଚ ଦେଇ ଭୂମିଠାରୁ 6 m ଉଚ୍ଚ ଏକ କୋଠା ଘରର ଶୀର୍ଷରେ ପହଞ୍ଚିବା ପାଇଁ 2 ମିନିଟ୍ ଲାଗିଲା । ବ୍ୟକ୍ତିଙ୍କର ପାୱାର୍ କେତେ ?

(A) 29.4 W

(B) 58.8 W

(C) 882 W

(D) 1764 W

2. ନିମ୍ନୋକ୍ତ ମଧ୍ୟରୁ କେଉଁ କ୍ଷେତ୍ରରେ ଏକ ବସ୍ତୁର ସ୍ଥିରତାର ଜଡ଼ତା ମପାଯାଏ ?

(A) ବେଗ

(B) ତ୍ୱରଣ

(C) ବସ୍ତୁତ୍ୱ

(D) ପାୱାର୍

(*Space For Rough Work*)

3.

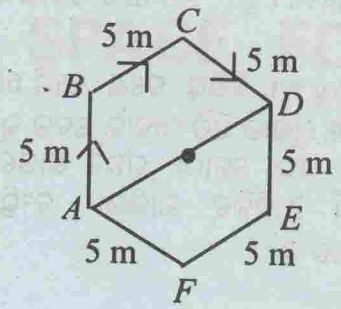

The figure given above is a regular hexagon. A man moved on its boundary from A to D in the path indicated by arrows. The magnitude of his displacement is

(A) 15 m

(B) $10\sqrt{3}$m

(C) $6\sqrt{3}$m

(D) 10 m

3.

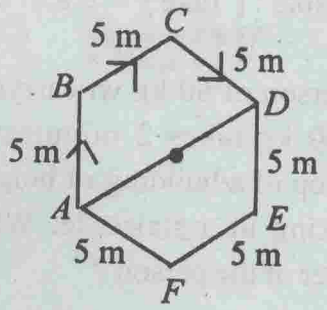

ଉପରେ ଦତ୍ତ ଚିତ୍ରଟି ଏକ ସୁସମ ଷଡ୍‌ଭୁଜ କ୍ଷେତ୍ର। ଜଣେ ବ୍ୟକ୍ତି ଏହି କ୍ଷେତ୍ରର ପରିସୀମାରେ A ଠାରୁ D ପର୍ଯ୍ୟନ୍ତ ତୀର ଦ୍ୱାରା ସୂଚୀତ ପଥରେ ଯାତ୍ରା କଲେ । ତାଙ୍କର ବିସ୍ଥାପନର ପରିମାଣ ହେଉଛି

(A) 15 m

(B) $10\sqrt{3}$m

(C) $6\sqrt{3}$m

(D) 10 m

(*Space For Rough Work*)

4. If there is a current of 0.4A in a conducting wire then the number of electrons that flow through any cross-section of the wire in 8 s would be

(A) 2×10^{19}

(B) 4×10^{19}

(C) 8×10^{19}

(D) 3.2×10^{20}

4. ଏକ ପରିବାହୀ ତାରରେ ବିଦ୍ୟୁତ୍ ସ୍ରୋତର ପରିମାଣ 0.4 A ଥିଲେ, ଏହି ତାରର ଯେ କୌଣସି ପ୍ରସ୍ଥଚ୍ଛେଦ ମଧ୍ୟଦେଇ 8 s ରେ ପ୍ରବାହିତ ଇଲେକ୍‌ଟ୍ରନ୍ ସଂଖ୍ୟା ହେବ

(A) 2×10^{19}

(B) 4×10^{19}

(C) 8×10^{19}

(D) 3.2×10^{20}

5.

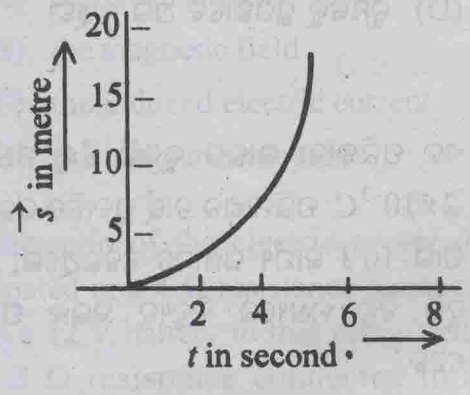

It is indicated from the given graph above that the motion of the body is

(A) of uniform velocity

(B) of non-uniform velocity

(C) of uniform retardation

(D) of non-uniform retardation

5.

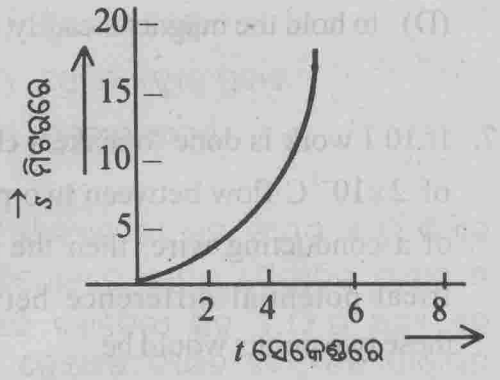

ଉପରେ ଦତ୍ତ ଲେଖ ଚିତ୍ରରୁ ସୂଚୀତ ହୁଏ ଯେ ବସ୍ତୁଟିର ଗତି

(A) ସମ ପରିବେଗ ବିଶିଷ୍ଟ

(B) ଅସମ ପରିବେଗ ବିଶିଷ୍ଟ

(C) ସମ ମନ୍ଦନ ବିଶିଷ୍ଟ

(D) ଅସମ ମନ୍ଦନ ବିଶିଷ୍ଟ

(*Space For Rough Work*)

6. The function of the commutator in the electric generator is

(A) to rotate the armature

(B) to change the direction of current in the external circuit

(C) to keep the direction of current in the external circuit constant

(D) to hold the magnet steadily

6. ବିଦ୍ୟୁତ୍ ଜନିତ୍ରରେ କମ୍ୟୁଟେଟର୍‌ର କାମ ହେଉଛି

(A) ଆର୍ମେଚର୍‌କୁ ଘୂରାଇବା

(B) ବାହ୍ୟ ପରିପଥରେ ବିଦ୍ୟୁତ୍ ପ୍ରବାହର ଦିଗ ବଦଳାଇବା

(C) ବାହ୍ୟ ପରିପଥରେ ବିଦ୍ୟୁତ୍ ପ୍ରବାହର ଦିଗ ସ୍ଥିର ରଖିବା

(D) ଚୁମ୍ବକକୁ ସ୍ଥିରଭାବେ ଧରି ରଖିବା

7. If 10 J work is done to make a charge of 2×10^{-3}C flow between two points of a conducting wire, then the electrical potential difference between these two points would be

(A) 5 V

(B) 50 V

(C) 500 V

(D) 5000 V

7. ଏକ ପରିବାହୀ ତାରର ଦୁଇଟି ବିନ୍ଦୁ ମଧ୍ୟରେ 2×10^{-3}C ପରିମାଣର ଚାର୍ଜ୍ ପ୍ରବାହିତ କରାଇବା ପାଇଁ 10 J କାର୍ଯ୍ୟ ସମ୍ପାଦିତ ହେଉଥିଲେ, ସେହି ଦୁଇ ବିନ୍ଦୁ ମଧ୍ୟରେ ବିଦ୍ୟୁତ୍ ବିଭବ ପାର୍ଥକ୍ୟ ହେବ

(A) 5 V

(B) 50 V

(C) 500 V

(D) 5000 V

(*Space For Rough Work*)

8. According to Fleming's right hand rule, the thumb, forefinger and middle finger are kept at right angles to one another. If the thumb is kept in the direction of motion of the conductor, then which one of the following would be indicated by the middle finger ?

(A) the electric field

(B) the magnetic field

(C) the induced electric current

(D) the magnetic moment

8. ଫ୍ଲେମିଂଙ୍କ ଦକ୍ଷିଣ ହସ୍ତ ନିୟମ ଅନୁଯାୟୀ ବୃଦ୍ଧାଙ୍ଗୁଳି, ତର୍ଜନୀ ଓ ମଧ୍ୟମାକୁ ପରସ୍ପର ପ୍ରତି ଲମ୍ବ ଭାବରେ ରଖାଗଲା । ଯଦି ବୃଦ୍ଧାଙ୍ଗୁଳିକୁ ପରିବାହୀର ଗତି ଦିଗରେ ରଖାଯାଏ, ତେବେ ମଧ୍ୟମା ଦ୍ୱାରା ନିମ୍ନୋକ୍ତ ମଧ୍ୟରୁ କେଉଁ ରାଶିଟିର ଦିଗ ସୂଚୀତ ହେବ ?

(A) ବିଦ୍ୟୁତ୍ କ୍ଷେତ୍ର

(B) ଚୁମ୍ବକୀୟ କ୍ଷେତ୍ର

(C) ପ୍ରେରିତ ବିଦ୍ୟୁତ୍ ପ୍ରବାହ

(D) ଚୁମ୍ବକୀୟ ଆଘୂର୍ଣ୍ଣ

9. The ratio of the electric power dissipated in a 4 Ω resistance connected to a 12 V battery to that dissipated in a 3 Ω resistance connected to the same battery would be

(A) 16 : 9

(B) 4 : 3

(C) 3 : 4

(D) 9 : 16

9. 12 V ବ୍ୟାଟେରୀ ସହ ସଂଯୁକ୍ତ 4 Ω ର ଏକ ପ୍ରତିରୋଧରେ ବ୍ୟୟିତ ବୈଦ୍ୟୁତିକ ପାୱାର୍ ଓ ସେହି ବ୍ୟାଟେରୀ ସହ 3 Ω ର ଅନ୍ୟ ଏକ ପ୍ରତିରୋଧରେ ବ୍ୟୟିତ ବୈଦ୍ୟୁତିକ ପାୱାର୍‌ର ଅନୁପାତ ହେବ

(A) 16 : 9

(B) 4 : 3

(C) 3 : 4

(D) 9 : 16

(*Space For Rough Work*)

10. By pulling a copper wire uniformly its length was made twice its original length. If the resistance of the original wire is 8 Ω, then the resistance of the elongated wire will be

(A) 32 Ω

(B) 16 Ω

(C) 4 Ω

(D) 2 Ω

10. ଏକ ତମ୍ବା ତାରକୁ ସମଭାବରେ ଟାଣି ତାହାର ମୂଳ ଦୈର୍ଘ୍ୟର ଦୁଇଗୁଣ କରାଗଲା । ଯଦି ମୂଳ ତାରଟିର ପ୍ରତିରୋଧ 8 Ω ଥାଏ, ତେବେ ଲମ୍ବ କରାଯାଇଥିବା ତାରଟିର ପ୍ରତିରୋଧ ହେବ

(A) 32 Ω

(B) 16 Ω

(C) 4 Ω

(D) 2 Ω

11. In which case of the following combinations of three resistances in parallel connected in a circuit with a 12 V battery, will the current be minimum ?

(A) 10 Ω, 15 Ω, 25 Ω

(B) 10 Ω, 15 Ω, 30 Ω

(C) 10 Ω, 25 Ω, 30 Ω

(D) 15 Ω, 25 Ω, 30 Ω

11. ନିମ୍ନୋକ୍ତ ମଧ୍ୟରୁ କେଉଁ ପ୍ରତିରୋଧତ୍ରୟକୁ ସମାନ୍ତର ଭାବେ ଏକ 12 V ବ୍ୟାଟେରୀ ସହ ସଂଯୋଗ କଲେ ପରିପଥରେ ବିଦ୍ୟୁତ୍ ପ୍ରବାହ ସର୍ବନିମ୍ନ ହେବ ?

(A) 10 Ω, 15 Ω, 25 Ω

(B) 10 Ω, 15 Ω, 30 Ω

(C) 10 Ω, 25 Ω, 30 Ω

(D) 15 Ω, 25 Ω, 30 Ω

(*Space For Rough Work*)

12. 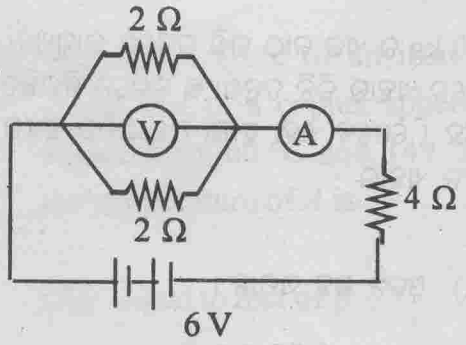

The reading of voltmeter V in the above given electric circuit will be

(A) 0.833 volt
(B) 1 volt
(C) 1.2 volt
(D) 2.4 volt

13. If two electric heaters each of 500 W and three electric bulbs each of 60 W are used for 5 hours a day on the average then how many units of electricity will be consumed in the month of April ?

(A) 270
(B) 177
(C) 153
(D) 150

12. 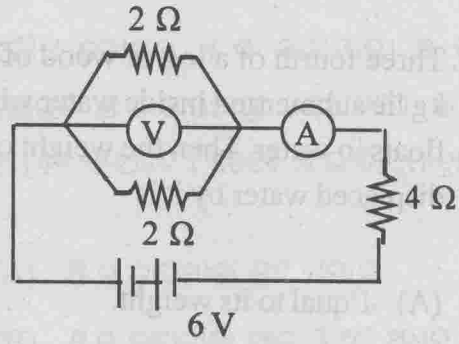

ଉପରେ ଦତ୍ତ ବିଦ୍ୟୁତ୍ ପରିପଥରେ ଭୋଲ୍ଟମିଟର V ଦ୍ୱାରା ସୂଚୀତ ପାଠ୍ୟାଙ୍କ ହେବ

(A) 0.833 volt
(B) 1 volt
(C) 1.2 volt
(D) 2.4 volt

13. 500 Wର ଦୁଇଟି ବିଦ୍ୟୁତ୍ ହିଟର୍ ଓ 60 Wର ତିନୋଟି ବିଦ୍ୟୁତ୍ ବଲବ୍ ହାରାହାରି ଦିନକୁ 5 ଘଣ୍ଟା ଲେଖାଏଁ ବ୍ୟବହୃତ ହେଲେ ଏପ୍ରିଲ୍ ମାସରେ କେତେ ୟୁନିଟ୍ ବିଦ୍ୟୁତ୍ ଶକ୍ତି ବ୍ୟୟିତ ହେବ ?

(A) 270
(B) 177
(C) 153
(D) 150

(*Space For Rough Work*)

14. Three fourth of a log of wood of 100 kg lie submerged inside water while it floats in water. Then the weight of the displaced water by it is

(A) Equal to its weight.

(B) 0.75 times its weight.

(C) 1.25 times its weight.

(D) 1.33 times its weight.

15. The densities of two liquids each of equal mass m are d_1 and d_2 respectively. A uniform mixture is prepared by mixing the two. The density of this mixture would be

(A) $\frac{1}{2}(d_1 + d_2)$

(B) $d_1 d_2 / 2(d_1 + d_2)$

(C) $2\ d_1 d_2 / (d_1 + d_2)$

(D) $\sqrt{d_1 d_2}$

14. 100 kg ର ଏକ କାଠ ଗଣ୍ଡି ଜଳରେ ଭାସୁଥିବା ବେଳେ ଏହାର ତିନି ଚତୁର୍ଥାଂଶ ଜଳରେ ନିମଜ୍ଜିତ ରହେ । ତେବେ ଏହା ଦ୍ୱାରା ଅପସାରିତ ଜଳର ଓଜନ ଏହାର

(A) ଓଜନ ସହ ସମାନ ।

(B) ଓଜନର 0.75 ଗୁଣ ।

(C) ଓଜନର 1.25 ଗୁଣ ।

(D) ଓଜନର 1.33 ଗୁଣ ।

15. ସମ ବସ୍ତୁତ୍ୱ m ବିଶିଷ୍ଟ ଦୁଇଟି ତରଳ ପଦାର୍ଥର ସାନ୍ଦ୍ରତା ଯଥାକ୍ରମେ d_1 ଓ d_2 ଅଟେ । ଏହି ଦୁଇ ତରଳକୁ ମିଶାଯାଇ ଏକ ସମ ମିଶ୍ରଣ ପ୍ରସ୍ତୁତ କରା-ଗଲା । ଏହି ମିଶ୍ରଣର ସାନ୍ଦ୍ରତା ହେବ

(A) $\frac{1}{2}(d_1 + d_2)$

(B) $d_1 d_2 / 2(d_1 + d_2)$

(C) $2\ d_1 d_2 / (d_1 + d_2)$

(D) $\sqrt{d_1 d_2}$

(*Space For Rough Work*)

16. The temperature of an iron sphere A and that of a copper sphere B are respectively 60 °C and 149 °F. Then the temperature of A is

(A) equal to that of B

(B) greater than that of B by 3 °C

(C) less than that of B by 5 °C

(D) 0.9 times that of B

16. ଲୌହ ଗୋଲକ A ର ତାପମାତ୍ରା ଓ ତାମ୍ର ଗୋଲକ B ର ତାପମାତ୍ରା ଯଥାକ୍ରମେ 60 °C ଓ 149 °F ଅଟେ । ତେବେ A ର ତାପମାତ୍ରା

(A) B ର ତାପମାତ୍ରା ସହ ସମାନ

(B) B ର ତାପମାତ୍ରା ଠାରୁ 3 °C ଅଧିକ

(C) B ର ତାପ୍ରମାତ୍ରା ଠାରୁ 5 °C କମ୍

(D) B ର ତାପମାତ୍ରାର 0.9 ଗୁଣ

17. Out of the following which one changes at the time of boiling of water ?

(A) Specific heat

(B) Latent heat

(C) Quantity of heat

(D) Temperature

17. ଜଳର ସ୍ଫୁଟନ ଅବସ୍ଥାରେ ନିମ୍ନୋକ୍ତ ମଧ୍ୟରୁ କେଉଁଟିର ପରିବର୍ତ୍ତନ ହୋଇଥାଏ ?

(A) ବିଶିଷ୍ଟ ତାପ

(B) ଗୁପ୍ତ ତାପ

(C) ତାପ ପରିମାଣ

(D) ତାପମାତ୍ରା

(*Space For Rough Work*)

18. The weight of a hollow sphere made of silver is 210 g in air. On immersing it in water, 25 cm^3 of water was displaced. The volume of the empty space inside the sphere would be (Density of silver is $10.5/cm^3$)

(A) 10 cm^3

(B) 5 cm^3

(C) 0.1 cm^3

(D) 0.05 cm^3

18. ରୂପାରେ ତିଆରି ଏକ ଫମ୍ପା ଗୋଲକର ବାୟୁରେ ଓଜନ 210 g ଅଟେ । ଗୋଲକଟିକୁ ଜଳରେ ବୁଡ଼ାଇବାରୁ 25 cm^3 ଜଳ ଅପସାରିତ ହେଲା । ଗୋଲକଟିର ଫମ୍ପା ଅଂଶର ଆୟତନ ହେବ

(ରୂପାର ସାନ୍ଦ୍ରତା ହେଉଛି $10.5/cm^3$)

(A) 10 cm^3

(B) 5 cm^3

(C) 0.1 cm^3

(D) 0.05 cm^3

19. The kinetic energies of two iron balls of masses 1 kg and 2 kg are equal. If the momentum of the 1 kg ball is p_1 units and that of the 2 kg ball is p_2 units, then $p_1 : p_2$ would be

(A) 1 : 4

(B) 1: 2

(C) $1:\sqrt{2}$

(D) 1 : 1

19. 1 kg ଓ 2 kg ବସ୍ତୁତ୍ୱ ବିଶିଷ୍ଟ ଦୁଇଟି ଲୌହ ପେଣ୍ଡୁ ସମାନ ଗତିଜ ଶକ୍ତି ବିଶିଷ୍ଟ ଅଟନ୍ତି । ଯଦି 1 kg ପେଣ୍ଡୁଟିର ସଂବେଗ p_1 ଏକକ ଏବଂ 2 kg ପେଣ୍ଡୁଟିର ସଂବେଗ p_2 ଏକକ ହୁଏ, ତେବେ $p_1 : p_2$ ହେବ

(A) 1 : 4

(B) 1 : 2

(C) $1:\sqrt{2}$

(D) 1 : 1

(*Space For Rough Work*)

20. 2 litres of water was converted into ice at a temperature of 273 K. If the latent heat of ice is 80 calorie per gram, then the amount of heat liberated in joule in this process would be

(A) 380952

(B) 672000

(C) 38095.2

(D) 16042

21. The length, breadth and height of an iron box are 40 cm, 30 cm and 20 cm respectively. If the weight of the box with the articles in it is 50 kg wt and the 40 cm × 30 cm face becomes its base ; then the pressure on this face would be

(A) 4083 N/m^2

(B) 6125 N/m^2

(C) 8167 N/m^2

(D) 20417 N/m^2

20. 2 ଲିଟର ଜଳକୁ 273 K ତାପମାତ୍ରାରେ ବରଫରେ ପରିଣତ କରାଗଲା । ବରଫର ଗୁପ୍ତ ତାପ 80 କ୍ୟାଲୋରୀ/ଗ୍ରାମ୍ ହେଲେ, ଏହି ପ୍ରକ୍ରିୟାରେ ନିର୍ଗତ ତାପର ପରିମାଣ ଜୁଲ୍‌ରେ ହେବ

(A) 380952

(B) 672000

(C) 38095.2

(D) 16042

21. ଏକ ଲୌହ ବାକ୍ସର ଲମ୍ବ, ପ୍ରସ୍ଥ ଏବଂ ଉଚ୍ଚତା ଯଥାକ୍ରମେ 40 cm, 30 cm ଓ 20 cm ଅଟେ। ବାକ୍ସସ୍ଥ ଜିନିଷ ସହ ବାକ୍ସଟିର ଓଜନ 50 kg wt ହେଲେ ଏବଂ 40 cm × 30 cm ପୃଷ୍ଠଟି ଏହାର ଭୂମି ହୋଇଥିଲେ, ଏହି ପୃଷ୍ଠ ପ୍ରତି ଚାପ ହେବ

(A) 4083 N/m^2

(B) 6125 N/m^2

(C) 8167 N/m^2

(D) 20417 N/m^2

(*Space For Rough Work*)

22. On striking a nail by a 0.5 kg hammer moving with a speed of 50 m/s, the hammer comes to rest in 0.01s. The force exerted by the nail on the hammer would be

(A) 250 N

(B) 500 N

(C) 1250 N

(D) 2500 N

22. 50 m/s ବେଗରେ ଗତିଶୀଳ ଏକ 0.5 kg ହାତୁଡ଼ି ଦ୍ୱାରା କଣ୍ଟାଟିଏ କାଠ ପଟାରେ ପିଟିବାରୁ ହାତୁଡ଼ିଟି 0.01s ରେ ସ୍ଥିରାବସ୍ଥାକୁ ଆସେ । କଣ୍ଟାଟି ହାତୁଡ଼ି ଉପରେ ପ୍ରୟୋଗ କରୁଥିବା ବଳ ହେବ

(A) 250 N

(B) 500 N

(C) 1250 N

(D) 2500 N

23. The distance between the bodies *A* and *B* is 5 m and that between *A* and *C* is 10 m. If the gravitational force between *A* and *B* becomes equal to that between *A* and *C*, then the mass of *B* is how many times that of *C* ?

(A) 0.25 times

(B) 0.5 times

(C) 2 times

(D) 4 times

23. *A* ଓ *B* ବସ୍ତୁଦ୍ୱୟ ମଧ୍ୟରେ ବ୍ୟବଧାନ 5 m ଏବଂ *A* ଓ *C* ବସ୍ତୁଦ୍ୱୟ ମଧ୍ୟରେ ବ୍ୟବଧାନ 10 m ଅଟେ । ଯଦି *A* ଓ *B* ମଧ୍ୟରେ ସୃଷ୍ଟ କ୍ରିୟାଶୀଳ ମହାକର୍ଷଣ ବଳ ଏବଂ *A* ଓ *C* ମଧ୍ୟରେ ସୃଷ୍ଟ କ୍ରିୟାଶୀଳ ମହାକର୍ଷଣ ବଳଦ୍ୱୟ ସମାନ ହୁଅନ୍ତି, ତେବେ *B* ର ବସ୍ତୁତ୍ୱ *C* ର ବସ୍ତୁତ୍ୱର କେତେ ଗୁଣ ?

(A) 0.25 ଗୁଣ

(B) 0.5 ଗୁଣ

(C) 2 ଗୁଣ

(D) 4 ଗୁଣ

(*Space For Rough Work*)

24. Which one of the following is not a contact force ?

(A) Friction
(B) Gravitation
(C) Tension
(D) Pull

24. ନିମ୍ନୋକ୍ତ ମଧ୍ୟରୁ କେଉଁଟି ସଂସ୍ପର୍ଶ ବଳ ନୁହେଁ ?

(A) ଘର୍ଷଣ
(B) ମହାକର୍ଷଣ
(C) ଟାନ
(D) ଟଣା

25. A body moving with uniform acceleration covers 120 m in 8 s and 252 m in 12 s. The initial velocity and acceleration of the body in S.I. units are respectively.

(A) 2 and 2
(B) 2 and 3
(C) 3 and 2
(D) 3 and 3

25. ସମତ୍ୱରଣରେ ଗତିକରୁଥିବା ଏକ ବସ୍ତୁ 8 ସେକେଣ୍ଡରେ 120 m ଅତିକ୍ରମ କରେ ଏବଂ 12 ସେକେଣ୍ଡରେ 252 m ଅତିକ୍ରମ କରେ । ବସ୍ତୁଟିର ପ୍ରାରମ୍ଭିକ ପରିବେଗ ଓ ତ୍ୱରଣ ଯଥାକ୍ରମେ ଏସ. ଆଇ. ଏକକରେ ହେବେ

(A) 2 ଓ 2
(B) 2 ଓ 3
(C) 3 ଓ 2
(D) 3 ଓ 3

(*Space For Rough Work*)

PART—II
(CHEMISTRY)

26. (*a*) All bases are not alkalies.

(*b*) All combustible substances are inflammable.

(*c*) Amalgam is an alloy.

(A) (*a*) and (*b*)are correct and (*c*) is wrong

(B) (*b*) and (*c*)are correct and (*a*) is wrong

(C) (*c*) and (*a*)are correct and (*b*) is wrong

(D) (*a*) (*b*) and (*c*) are correct

26. (*a*) ସବୁ କ୍ଷାର ଆଲ୍‌କାଲି ନୁହନ୍ତି ।

(*b*) ସବୁ ଦହନଶୀଳ ପଦାର୍ଥ ଜ୍ୱଳନଶୀଳ ।

(*c*) ଆମାଲ୍‌ଗାମ୍ ଏକ ଏଲୟ ଅଟେ ।

(A) (*a*) ଓ (*b*) ଠିକ୍ ଏବଂ (*c*) ଭୁଲ୍

(B) (*b*) ଓ (*c*) ଠିକ୍ ଏବଂ (*a*) ଭୁଲ୍

(C) (*c*) ଓ (*a*) ଠିକ୍ ଏବଂ (*b*) ଭୁଲ୍

(D) (*a*), (*b*) ଓ (*c*) ଠିକ୍

(*Space For Rough Work*)

27. XO_2 is the formula of a metallic oxide.

(*a*) The formula of the chloride of the metal would be XCl_2.

(*b*) The formula of the sulphate of the metal would be $X(SO_4)_2$.

(*c*) The formula of the nitrate of the metal would be $X(NO_3)_4$.

(A) (*a*) and (*b*)are correct and (*c*) is wrong

(B) (*b*) and (*c*)are correct and (*a*) is wrong

(C) (*c*) and (*a*)are correct and (*b*) is wrong

(D) (*a*), (*b*) and (*c*) are correct

27. XO_2 ହେଉଛି ଏକ ଧାତବ ଅକ୍ସାଇଡ୍‌ର ସଂକେତ ।

(*a*) ସେହି ଧାତୁର କ୍ଲୋରାଇଡ୍‌ର ସଂକେତ ହେବ XCl_2 ।

(*b*) ସେହି ଧାତୁର ସଲ୍‌ଫେଟ୍‌ର ସଂକେତ ହେବ $X(SO_4)_2$ ।

(*c*) ସେହି ଧାତୁର ନାଇଟ୍ରେଟ୍‌ର ସଂକେତ ହେବ $X(NO_3)_4$ ।

(A) (*a*) ଓ (*b*) ଠିକ୍ ଏବଂ (*c*) ଭୁଲ୍

(B) (*b*) ଓ (*c*) ଠିକ୍ ଏବଂ (*a*) ଭୁଲ୍

(C) (*c*) ଓ (*a*) ଠିକ୍ ଏବଂ (*b*) ଭୁଲ୍

(D) (*a*), (*b*) ଓ (*c*) ଠିକ୍

(*Space For Rough Work*)

28. In the modern periodic table the lanthanide and actinide elements belong to

(*a*) the same group and the same period.

(*b*) the same group and different periods.

(*c*) the same period and different groups.

(A) (*a*) is correct and (*b*) and (*c*) are wrong

(B) (*b*) is correct and (*c*) and (*a*) are wrong

(C) (*c*) is correct and (*a*) and (*b*) are wrong

(D) (*a*), (*b*) and (*c*) are wrong

28. ଆଧୁନିକ ପର୍ଯ୍ୟାୟ ସାରଣୀରେ ଲାନ୍ଥାନାଇଡ୍ ଓ ଏକ୍ଟିନାଇଡ୍ ମୌଳିକଗୁଡ଼ିକ

(*a*) ଏକା ଶ୍ରେଣୀ ଏବଂ ଏକା ପର୍ଯ୍ୟାୟଭୁକ୍ତ ।

(*b*) ଏକା ଶ୍ରେଣୀ ଏବଂ ଭିନ୍ନ ଭିନ୍ନ ପର୍ଯ୍ୟାୟଭୁକ୍ତ ।

(*c*) ଏକା ପର୍ଯ୍ୟାୟ ଏବଂ ଭିନ୍ନ ଭିନ୍ନ ଶ୍ରେଣୀଭୁକ୍ତ ।

(A) (*a*) ଠିକ୍ ଏବଂ (*b*) ଓ (*c*) ଭୁଲ୍

(B) (*b*) ଠିକ୍ ଏବଂ (*c*) ଓ (*a*) ଭୁଲ୍

(C) (*c*) ଠିକ୍ ଏବଂ (*a*) ଓ (*b*) ଭୁଲ୍

(D) (*a*), (*b*) ଓ (*c*) ଭୁଲ୍

(*Space For Rough Work*)

29. (*a*) When metals react with hydrogen, hydrides are formed.

(*b*) When non-metals react with hydrogen, hydrides are formed.

(*c*) Metal hydrides are covalent compounds and non-metal hydrides are electrovalent compounds.

(A) (*a*) and (*b*)are correct and (*c*) is wrong

(B) (*b*) and (*c*)are correct and (*a*) is wrong

(C) (*c*) and (*a*)are correct and (*b*) is wrong

(D) (*a*), (*b*) and (*c*) are correct

29. (*a*) ଧାତୁଗୁଡ଼ିକ ହାଇଡ୍ରୋଜେନ୍ ସହ ପ୍ରତିକ୍ରିୟା କରି ହାଇଡ୍ରାଇଡ୍ ଗଠନ କରନ୍ତି ।

(*b*) ଅଧାତୁଗୁଡ଼ିକ ହାଇଡ୍ରୋଜେନ୍ ସହ ପ୍ରତିକ୍ରିୟା କରି ହାଇଡ୍ରାଇଡ୍ ଗଠନ କରନ୍ତି ।

(*c*) ଧାତବ ହାଇଡ୍ରାଇଡ୍‌ଗୁଡ଼ିକ ସହ ସଂଯୋଜୀ ଯୌଗିକ ଅଟନ୍ତି ଏବଂ ଅଧାତବ ହାଇ-ଡ୍ରାଇଡ୍‌ଗୁଡ଼ିକ ବିଦ୍ୟୁତ୍ ସଂଯୋଜୀ ଯୌଗିକ ଅଟନ୍ତି ।

(A) (*a*) ଓ (*b*) ଠିକ୍ ଏବଂ (*c*) ଭୁଲ୍

(B) (*b*) ଓ (*c*) ଠିକ୍ ଏବଂ (*a*) ଭୁଲ୍

(C) (*c*) ଓ (*a*) ଠିକ୍ ଏବଂ (*b*) ଭୁଲ୍

(D) (*a*), (*b*) ଓ (*c*) ଠିକ୍

(*Space For Rough Work*)

30. $$\underset{A}{2HI} + \underset{B}{H_2O_2} \longrightarrow \underset{C}{2H_2O} + \underset{D}{I_2}$$

In the above reaction,

(*a*) C is a reduced product.

(*b*) B is oxidant.

(*c*) A is reductant.

(A) (*b*) and (*c*)are correct and (*a*) is wrong

(B) (*a*) is correct and (*b*) and (*c*) are wrong

(C) (*a*), (*b*) and (*c*) are correct

(D) (*a*), (*b*) and (*c*) are wrong

30. $$\underset{A}{2HI} + \underset{B}{H_2O_2} \longrightarrow \underset{C}{2H_2O} + \underset{D}{I_2}$$

ଉପରୋକ୍ତ ପ୍ରତିକ୍ରିୟାରେ

(*a*) C ହେଉଛି ଏକ ବିଜାରିତ ଉତ୍ପାଦ ।

(*b*) B ହେଉଛି ଜାରକ ।

(*c*) A ହେଉଛି ବିଜାରକ ।

(A) (*b*) ଓ (*c*) ଠିକ୍ ଏବଂ (*a*) ଭୁଲ୍

(B) (*a*) ଠିକ୍ ଏବଂ (*b*) ଓ (*c*) ଭୁଲ୍

(C) (*a*), (*b*) ଏବଂ (*c*) ଠିକ୍

(D) (*a*), (*b*) ଏବଂ (*c*) ଭୁଲ୍

(*Space For Rough Work*)

(Contin

31. (*a*) The chief component of bio-gas and that of natural gas are the same.

(*b*) The chief component of CNG and that of LPG are the same.

(*c*) The calorific value of natural gas is greater than that of petroleum gas.

(A) (*a*) and (*b*)are correct and (*c*) is wrong

(B) (*b*) and (*c*) are correct and (*a*) is wrong

(C) (*c*) is correct and (*a*) and (*b*) are wrong

(D) (*a*) is correct and (*b*) and (*c*) are wrong

31. (*a*) ଜୈବ ଗ୍ୟାସ୍ ଏବଂ ପ୍ରାକୃତିକ ଗ୍ୟାସ୍‌ର ମୁଖ୍ୟ ଉପାଦାନ ଏକା ଅଟେ ।

(*b*) CNG ଏବଂ LPGର ମୁଖ୍ୟ ଉପାଦାନ ଏକା ଅଟେ ।

(*c*) ପ୍ରାକୃତିକ ଗ୍ୟାସ୍‌ର କାଲୋରି ମୂଲ୍ୟ ପେଟ୍ରୋଲିୟମ୍ ଗ୍ୟାସ୍‌ର କାଲୋରି ମୂଲ୍ୟ ଠାରୁ ଅଧିକ ଅଟେ ।

(A) (*a*) ଓ (*b*) ଠିକ୍ ଏବଂ (*c*) ଭୁଲ୍

(B) (*b*) ଓ (*c*) ଠିକ୍ ଏବଂ (*a*) ଭୁଲ୍

(C) (*c*) ଠିକ୍ ଏବଂ (*a*) ଓ (*b*) ଭୁଲ୍

(D) (*a*) ଠିକ୍ ଏବଂ (*b*) ଓ (*c*) ଭୁଲ୍

(*Space For Rough Work*)

32. (*a*) Ignition point and kindling temperature are the same.

(*b*) All inflammable substances are fuels.

(*c*) Oxygen is indispensable for combustion.

(A) (*a*) and (*b*)are correct and (*c*) is wrong

(B) (*a*) is correct and (*b*) and (*c*) are wrong

(C) (*b*) is correct and (*a*) and (*c*) are wrong

(D) (*a*), (*b*) and (*c*) are correct

32. (*a*) ଜ୍ୱଳନାଙ୍କ ଏବଂ ପ୍ରଜ୍ୱଳନ ତାପମାତ୍ରା ଏକ ଅଟେ ।

(*b*) ସମସ୍ତ ଜ୍ୱଳନଶୀଳ ପଦାର୍ଥ ଇନ୍ଧନ ଅଟନ୍ତି ।

(*c*) ଦହନ ପାଇଁ ଅମ୍ଳଜାନ ଅପରିହାର୍ଯ୍ୟ ।

(A) (*a*) ଓ (*b*) ଠିକ୍ ଏବଂ (*c*) ଭୁଲ୍

(B) (*a*) ଠିକ୍ ଏବଂ (*b*) ଓ (*c*) ଭୁଲ୍

(C) (*b*) ଠିକ୍ ଏବଂ (*a*) ଓ (*c*) ଭୁଲ୍

(D) (*a*), (*b*) ଏବଂ (*c*) ଠିକ୍

(*Space For Rough Work*)

(Contin

33. (*a*) Cooking is not possible without fuels.

(*b*) Factories cannot run without fuels.

(*c*) Vehicles cannot run without fuels.

(A) (*a*) and (*c*)are correct and (*b*) is wrong

(B) (*a*) is correct and (*b*) and (*c*) are wrong

(C) (*a*) and (*b*)are correct and (*c*) is wrong

(D) (*a*), (*b*) and (*c*) are wrong

33. (*a*) ଇନ୍ଧନ ବିନା ରୋଷେଇ କାର୍ଯ୍ୟ ସମ୍ଭବପର ନୁହେଁ ।

(*b*) ଇନ୍ଧନ ବିନା କଳକାରଖାନା ଚାଲିପାରିବ ନାହିଁ ।

(*c*) ଇନ୍ଧନ ବିନା ଯାନବାହନର ଚଳାଚଳ ସମ୍ଭବ-ପର ନୁହେଁ ।

(A) (*a*) ଓ (*c*) ଠିକ୍ ଏବଂ (*b*) ଭୁଲ୍

(B) (*a*) ଠିକ୍ ଏବଂ (*b*) ଓ (*c*) ଭୁଲ୍

(C) (*a*) ଓ (*b*) ଠିକ୍ ଏବଂ (*c*) ଭୁଲ୍

(D) (*a*), (*b*) ଓ (*c*) ଭୁଲ୍

(*Space For Rough Work*)

34. (*a*) The absolute mass of an element is obtained by dividing the gram atomic weight of the element by the Avogadro number.

(*b*) The atomic weight of an element is a mere number.

(*c*) Atomic weight has a unit.

(A) (*a*) and (*b*) are correct and (*c*) is wrong

(B) (*c*) is correct and (*a*) and (*b*) are wrong

(C) (*c*) and (*a*)are correct and (*b*) is wrong

(D) (*b*) is correct and (*a*) and (*c*) are wrong

34. (*a*) ଏକ ମୌଳିକର ଗ୍ରାମ୍ ପାରମାଣବିକ ବସ୍ତୁତ୍ୱକୁ ଆଭୋଗାଡ୍ରୋଙ୍କ ସଂଖ୍ୟା ଦ୍ୱାରା ଭାଗ କଲେ ସେହି ମୌଳିକର ପରମ ବସ୍ତୁତ୍ୱ ମିଳିଥାଏ ।

(*b*) ଏକ ମୌଳିକର ପାରମାଣବିକ ବସ୍ତୁତ୍ୱ ହେଉଛି କେବଳ ଏକ ସଂଖ୍ୟା ।

(*c*) ପାରମାଣବିକ ବସ୍ତୁତ୍ୱର ଏକ ଏକକ ଅଛି ।

(A) (*a*) ଓ (*b*) ଠିକ୍ ଏବଂ (*c*) ଭୁଲ୍

(B) (*c*) ଠିକ୍ ଏବଂ (*a*) ଓ (*b*) ଭୁଲ୍

(C) (*c*) ଓ (*a*) ଠିକ୍ ଏବଂ (*b*) ଭୁଲ୍

(D) (*b*) ଠିକ୍ ଏବଂ (*a*) ଓ (*c*) ଭୁଲ୍

(*Space For Rough Work*)

35. (*a*) CO_2 and SO_2 are natural as well as man-made pollutants.

(*b*) Acid rain is due to the secondary pollutants.

(*c*) Depletion of ozone layer in the atmosphere is due to the primary pollutants.

(A) (*a*) and (*b*) are correct and (*c*) is wrong

(B) (*b*) and (*c*) are correct and (*a*) is wrong

(C) (*c*) and (*a*) are correct and (*b*) is wrong

(D) (*a*), (*b*) and (*c*) are correct

35. (*a*) CO_2 ଓ SO_2 ପ୍ରାକୃତିକ ଏବଂ ମନୁଷ୍ୟକୃତ ପ୍ରଦୂଷକ ଅଟନ୍ତି ।

(*b*) ଦ୍ୱିତୀୟକ ପ୍ରଦୂଷକ ଯୋଗୁଁ ଅମ୍ଳବର୍ଷା ହୋଇଥାଏ ।

(*c*) ବାୟୁମଣ୍ଡଳସ୍ଥ ଓଜୋନ୍ ସ୍ତରର ହ୍ରାସ ପ୍ରାଥମିକ ପ୍ରଦୂଷକ ଯୋଗୁଁ ହୋଇଥାଏ ।

(A) (*a*) ଓ (*b*) ଠିକ୍ ଏବଂ (*c*) ଭୁଲ୍

(B) (*b*) ଓ (*c*) ଠିକ୍ ଏବଂ (*a*) ଭୁଲ୍

(C) (*c*) ଓ (*a*) ଠିକ୍ ଏବଂ (*b*) ଭୁଲ୍

(D) (*a*), (*b*) ଓ (*c*) ଠିକ୍

(*Space For Rough Work*)

36. (*a*) In the case of calcium ion, electrons are there in 4 shells.

(*b*) In the case of Aluminium ion, electrons are there in 3 shells.

(*c*) In the case of Fluoride ion, electrons are there in 2 shells.

(A) (*a*) is correct and (*b*) and (*c*) are wrong

(B) (*b*) is correct and (*a*) and (*c*) are wrong

(C) (*c*) is correct and (*a*) and (*b*) are wrong

(D) (*a*), (*b*) and (*c*) are wrong

36. (*a*) କାଲ୍‌ସିୟମ୍ ଆୟନ୍ କ୍ଷେତ୍ରରେ 4ଟି ସେଲ୍‌ରେ ଇଲେକ୍‌ଟ୍ରନ୍ ଥାଏ ।

(*b*) ଏଲୁମିନିୟମ୍ ଆୟନ୍ କ୍ଷେତ୍ରରେ 3ଟି ସେଲ୍‌ରେ ଇଲେକ୍‌ଟ୍ରନ୍ ଥାଏ ।

(*c*) ଫ୍ଲୋରାଇଡ୍ ଆୟନ୍ କ୍ଷେତ୍ରରେ 2ଟି ସେଲ୍‌ରେ ଇଲେକ୍‌ଟ୍ରନ୍ ଥାଏ ।

(A) (*a*) ଠିକ୍ ଏବଂ (*b*) ଓ (*c*) ଭୁଲ୍

(B) (*b*) ଠିକ୍ ଏବଂ (*a*) ଓ (*c*) ଭୁଲ୍

(C) (*c*) ଠିକ୍ ଏବଂ (*a*) ଓ (*b*) ଭୁଲ୍

(D) (*a*), (*b*) ଏବଂ (*c*) ଭୁଲ୍

(*Space For Rough Work*)

37. (*a*) Calcination and roasting are required for all types of ores.

(*b*) Calcination is required for some ores and roasting for some other ores.

(*c*) Less air and less temperature are required for calcination than roasting.

(A) (*a*) is correct and (*b*) and (*c*) are wrong

(B) (*b*) and (*c*)are correct and (*a*) is wrong

(C) (*b*) is correct and (*a*) and (*c*) are wrong

(D) (*c*) is correct and (*a*) and (*b*) are wrong

37. (*a*) ସବୁ ପ୍ରକାର ଓର୍‌ପାଇଁ କାଲ୍‌ସିନେସନ୍ ଏବଂ ରୋଷ୍ଟିଂ ଆବଶ୍ୟକ ।

(*b*) କେତେକ ଓର୍‌ପାଇଁ କାଲ୍‌ସିନେସନ୍ ଏବଂ ଆଉ କେତେକ ଓର୍‌ପାଇଁ ରୋଷ୍ଟିଂ ଆବଶ୍ୟକ ।

(*c*) ରୋଷ୍ଟିଂ ଅପେକ୍ଷା କାଲ୍‌ସିନେସନ୍ ପାଇଁ କମ୍ ବାୟୁ ଏବଂ କମ୍ ତାପମାତ୍ରା ଆବଶ୍ୟକ ।

(A) (*a*) ଠିକ୍ ଏବଂ (*b*) ଓ (*c*) ଭୁଲ୍

(B) (*b*) ଓ (*c*) ଠିକ୍ ଏବଂ (*a*) ଭୁଲ୍

(C) (*b*) ଠିକ୍ ଏବଂ (*a*) ଓ (*c*) ଭୁଲ୍

(D) (*c*) ଠିକ୍ ଏବଂ (*a*) ଓ (*b*) ଭୁଲ୍

(*Space For Rough Work*)

38. (*a*) PPM (*b*) Micron (*c*) Light year out of the above three which are the units of the same physical quantity ?

(A) (*a*) and (*b*)
(B) (*b*) and (*c*)
(C) (*c*) and (*a*)
(D) (*a*), (*b*) and (*c*)

39. (*a*) Mol. wt. is applicable in the cases of compounds only.

(*b*) Mol. wt. is applicable in the cases of some elements and all compounds.

(*c*) Mol. wt. is applicable in the cases of all elements and all compounds.

(A) (*a*) is correct and (*b*) and (*c*) are wrong

(B) (*b*) is correct and (*a*) and (*c*) are wrong

(C) (*c*) is correct and (*a*) and (*b*) are wrong

(D) (*a*), (*b*) and (*c*) are wrong

38. (*a*) ପି. ପି. ଏମ୍. (*b*) ମାଇକ୍ରନ୍ (*c*) ଆଲୋକ-ବର୍ଷ ଉପରୋକ୍ତ ମଧ୍ୟରୁ କେଉଁଗୁଡ଼ିକ ଏକ ଭୌତିକ ରାଶିର ଏକକ ?

(A) (*a*) ଓ (*b*)
(B) (*b*) ଓ (*c*)
(C) (*c*) ଓ (*a*)
(D) (*a*), (*b*) ଓ (*c*)

39. (*a*) କେବଳ ଯୌଗିକ କ୍ଷେତ୍ରରେ ଆଣବିକ ବସ୍ତୁତ୍ୱ ପ୍ରଯୁଜ୍ୟ ।

(*b*) କେତେକ ମୌଳିକ ଏବଂ ସମସ୍ତ ଯୌଗିକ କ୍ଷେତ୍ରରେ ଆଣବିକ ବସ୍ତୁତ୍ୱ ପ୍ରଯୁଜ୍ୟ ।

(*c*) ସମସ୍ତ ମୌଳିକ ଏବଂ ସମସ୍ତ ଯୌଗିକ କ୍ଷେତ୍ରରେ ଆଣବିକ ବସ୍ତୁତ୍ୱ ପ୍ରଯୁଜ୍ୟ ।

(A) (*a*) ଠିକ୍ ଏବଂ (*b*) ଓ (*c*) ଭୁଲ୍

(B) (*b*) ଠିକ୍ ଏବଂ (*a*) ଓ (*c*) ଭୁଲ୍

(C) (*c*) ଠିକ୍ ଏବଂ (*a*) ଓ (*b*) ଭୁଲ୍

(D) (*a*), (*b*) ଏବଂ (*c*) ଭୁଲ୍

(*Space For Rough Work*)

40. According to a certain principle which one is different from the rest three ?

(A) Sulphuric acid

(B) Phosphoric acid

(C) Hydrochloric acid

(D) Nitric acid

41. Approximately how many water molecules would be there in one mililitre of distilled water ?
(Density of distilled water = 1gm/ml)

(A) 108.414×10^{23}

(B) 54.207×10^{23}

(C) 6.692×10^{22}

(D) 3.346×10^{22}

40. କୌଣସି ଏକ ନିର୍ଦ୍ଦିଷ୍ଟ ନିୟମ ଅନୁଯାୟୀ ଅନ୍ୟ ତିନୋଟିଠାରୁ କେଉଁଟି ଭିନ୍ନ ?

(A) ସଲ୍‌ଫ୍ୟୁରିକ୍ ଅମ୍ଳ

(B) ଫସଫରିକ୍ ଅମ୍ଳ

(C) ହାଇଡ୍ରୋକ୍ଲୋରିକ୍ ଅମ୍ଳ

(D) ନାଇଟ୍ରିକ୍ ଅମ୍ଳ

41. ଏକ ମିଲିଲିଟର୍ ପାତିତ ଜଳରେ ପାଖାପାଖି କେତୋଟି ଜଳ ଅଣୁ ଥିବ ?
(ପାତିତ ଜଳର ସାନ୍ଦ୍ରତା = 1 ଗ୍ରାମ୍/ମି.ଲି.)

(A) 108.414×10^{23}

(B) 54.207×10^{23}

(C) 6.692×10^{22}

(D) 3.346×10^{22}

(*Space For Rough Work*)

42. At NTP 112 ml of a gas shall be

(A) 0.001 mole

(B) 0.005 mole

(C) 0.0001 mole

(D) 0.0005 mole

43. Which one is not an alloy ?

(A) Au + Cu

(B) Fe + C

(C) C + S

(D) Pb + Sn

44. Which one of the following is placed in another block instead of its own block in the modern periodic table ?

(A) H

(B) He

(C) Xn

(D) Rn

42. ମାନକ ଚାପ ଓ ତାପମାତ୍ରାରେ 112 ମିଲି ଗ୍ୟାସ୍ ହେବ

(A) 0.001 ମୋଲ୍

(B) 0.005 ମୋଲ୍

(C) 0.0001 ମୋଲ୍

(D) 0.0005 ମୋଲ୍

43. କେଉଁଟି ଏଲୟ ନୁହେଁ ?

(A) Au + Cu

(B) Fe + C

(C) C + S

(D) Pb + Sn

44. ଆଧୁନିକ ପର୍ଯ୍ୟାୟ ସାରଣୀରେ ନିମ୍ନୋକ୍ତ ମଧ୍ୟରୁ କେଉଁଟିକୁ ନିଜ ବ୍ଲକ୍‌ରେ ନ ରଖି ଅନ୍ୟ ଏକ ବ୍ଲକ୍‌ରେ ରଖାଯାଇଛି ?

(A) H

(B) He

(C) Xn

(D) Rn

(*Space For Rough Work*)

45. Which one is the ore of mercury ?

(A) Galena

(B) Cinnabar

(C) Epsom

(D) Calamine

46. Which one is a balanced equation ?

(A) $Al_4C_3 + 6H_2O = 4Al(OH)_3 + 3CH_4$

(B) $2Al_4C_3 + 15H_2O = 8Al(OH)_3 + 6CH_4$

(C) $3Al_4C_3 + 13H_2O = 12Al(OH)_3 + 9CH_4$

(D) $Al_4C_3 + 12H_2O = 4Al(OH)_3 + 3CH_4$

45. ପାରଦର ଓର୍ କେଉଁଟି ?

(A) ଗାଲେନା

(B) ସିନାବାର୍

(C) ଏପ୍‌ସମ୍

(D) କାଲାମିନ୍

46. କେଉଁଟି ସମତୁଲ ସମୀକରଣ ?

(A) $Al_4C_3 + 6H_2O = 4Al(OH)_3 + 3CH_4$

(B) $2Al_4C_3 + 15H_2O = 8Al(OH)_3 + 6CH_4$

(C) $3Al_4C_3 + 13H_2O = 12Al(OH)_3 + 9CH_4$

(D) $Al_4C_3 + 12H_2O = 4Al(OH)_3 + 3CH_4$

(*Space For Rough Work*)

47. (*a*) $Cl + e^- \rightarrow Cl^-$

(*b*) $Cu^{++} + 2e^- \rightarrow Cu$

(A) (*a*) is reduction and (*b*) is oxidation

(B) (*b*) is reduction and (*a*) is oxidation

(C) Both (*a*) and (*b*) are oxidations

(D) Both (*a*) and (*b*) are reductions

47. (*a*) $Cl + e^- \rightarrow Cl^-$

(*b*) $Cu^{++} + 2e^- \rightarrow Cu$

(A) (*a*) ହେଉଛି ବିଜାରଣ ଏବଂ (*b*) ହେଉଛି ଜାରଣ

(B) (*b*) ହେଉଛି ବିଜାରଣ ଏବଂ (*a*) ହେଉଛି ଜାରଣ

(C) ଉଭୟ (*a*) ଏବଂ (*b*) ହେଉଛି ଜାରଣ

(D) ଉଭୟ (*a*) ଏବଂ (*b*) ହେଉଛି ବିଜାରଣ

48. $_bQ^a$

Here 'Q' represents the symbol of an element and out of the other two letters one represents the mass number and the other the atomic number of the element.

One atom of the element would have

(A) 'a' number of protons and 'b' number of neutrons

(B) 'b' number of protons and (a-b) number of neutrons

(C) 'a' number of protons and (b-a) number of neutrons

(D) 'b' number of protons and 'a' number of neutrons

48. $_bQ^a$

ଏଠାରେ 'Q' ଏକ ମୌଳିକର ପ୍ରତୀକକୁ ସୂଚାଉଛି ଏବଂ ଅନ୍ୟ ଦୁଇଟି ଅକ୍ଷର ମଧ୍ୟରୁ ଗୋଟିଏ ବସ୍ତୁତ୍ୱ ସଂଖ୍ୟାକୁ ଏବଂ ଅନ୍ୟଟି ପରମାଣୁ କ୍ରମାଙ୍କକୁ ସୂଚାଉଛି । ମୌଳିକଟିର ଏକ ପରମାଣୁରେ ଥିବ

(A) 'a' ସଂଖ୍ୟକ ପ୍ରୋଟନ୍ ଏବଂ 'b' ସଂଖ୍ୟକ ନିଉଟ୍ରନ୍

(B) 'b' ସଂଖ୍ୟକ ପ୍ରୋଟନ୍ ଏବଂ (a-b) ସଂଖ୍ୟକ ନିଉଟ୍ରନ୍

(C) 'a' ସଂଖ୍ୟକ ପ୍ରୋଟନ୍ ଏବଂ (b-a) ସଂଖ୍ୟକ ନିଉଟ୍ରନ୍

(D) 'b' ସଂଖ୍ୟକ ପ୍ରୋଟନ୍ ଏବଂ 'a' ସଂଖ୍ୟକ ନିଉଟ୍ରନ୍

(*Space For Rough Work*)

49. 10 litres of an aqueous solution contains 0.01 mole of a base in fully dissolved condition. What is the pH of the solution ?

(A) 3

(B) 4

(C) 10

(D) 11

49. 10 ଲିଟର୍ ଜଳୀୟ ଦ୍ରବଣରେ 0.01 ମୋଲ୍‌ର ଏକ କ୍ଷାର ସଂପୂର୍ଣ୍ଣଭାବେ ଦ୍ରବୀଭୂତ ଅବସ୍ଥାରେ ଅଛି । ଦ୍ରବଣର pH କେତେ ?

(A) 3

(B) 4

(C) 10

(D) 11

50. The hydroxide of a divalent metal dissociates completely into ions in aqueous solution. 0.5 mole of that compound would yield approximately how much OH^- ions in aqueous solution ?

(A) 2.008×10^{23}

(B) 3.012×10^{23}

(C) 6.023×10^{23}

(D) 12.046×10^{23}

50. ଏକ ଦ୍ୱିସଂଯୋଜୀ ଧାତୁର ହାଇଡ୍ରୋକ୍‌ସାଇଡ୍ ଜଳୀୟ ଦ୍ରବଣରେ ସଂପୂର୍ଣ୍ଣଭାବେ ଆୟନରେ ବିଯୋଜିତ ହୁଏ । ସେହି ଯୌଗିକର 0.5 ମୋଲ୍ ଜଳୀୟ ଦ୍ରବଣରେ ପ୍ରାୟ କେତେ OH^- ଆୟନ୍ ସୃଷ୍ଟି କରିବ ?

(A) 2.008×10^{23}

(B) 3.012×10^{23}

(C) 6.023×10^{23}

(D) 12.046×10^{23}

(*Space For Rough Work*)

PART—III

(MATHEMATICS)

[Take π as $\frac{22}{7}$ if nothing else is said about it.]

[ଅନ୍ୟ କୌଣସି ସୂଚନା ନ ଥିଲେ π ଲାଗି $\frac{22}{7}$ ବ୍ୟବହାର କର ।]

51. $\overline{PA}$ and $\overline{PB}$ are two tangents to a circle with A and B as the points of contact respectively. If $m\angle APB = x^\circ$, what is the measure in degrees of the angle inscribed in the minor arc with A and B as the end points ?

(A) $\frac{90-x}{2}$

(B) $\frac{90+x}{2}$

(C) $90-\frac{x}{2}$

(D) $90+\frac{x}{2}$

51. ଗୋଟିଏ ବୃତ୍ତ ପ୍ରତି ଅଙ୍କିତ ସ୍ପର୍ଶକ $\overline{PA}$ ଓ $\overline{PB}$ ର ସ୍ପର୍ଶବିନ୍ଦୁ ଯଥାକ୍ରମେ A ଓ B । ଯଦି $m\angle APB = x^\circ$ ହୁଏ,ତେବେ A ଓ B ପ୍ରାନ୍ତ ବିନ୍ଦୁ ବିଶିଷ୍ଟ କ୍ଷୁଦ୍ର ଚାପର ଅନ୍ତର୍ଲିଖିତ କୋଣର ପରିମାଣ କେତେ ଡିଗ୍ରୀ ?

(A) $\frac{90-x}{2}$

(B) $\frac{90+x}{2}$

(C) $90-\frac{x}{2}$

(D) $90+\frac{x}{2}$

(*Space For Rough Work*)

52. $\Delta ABC \sim \Delta PQR$. The length of the median $\overline{AD}$ and the area of ΔABC are m cm and a cm^2 respectively. What is the area in cm^2 of ΔPQR, if the median corresponding to $\overline{AD}$ is n cm long ?

(A) $\frac{am}{n}$

(B) $\frac{m}{an}$

(C) $\frac{an^2}{m^2}$

(D) $\frac{n^2}{am^2}$

52. $\Delta ABC \sim \Delta PQR$ । ΔABC ର ମଧ୍ୟମା $\overline{AD}$ ର ଦୈର୍ଘ୍ୟ ଓ କ୍ଷେତ୍ରଫଳ ଯଥାକ୍ରମେ m ସେ.ମି. ଓ a ବର୍ଗସେ.ମି. । ΔPQR ର ଯେଉଁ ମଧ୍ୟମା $\overline{AD}$ ମଧ୍ୟମା ସହ ଅନୁରୂପ, ତା'ର ଦୈର୍ଘ୍ୟ n ସେ.ମି. ହେଲେ ΔPQR ର କ୍ଷେତ୍ରଫଳ କେତେ ବର୍ଗସେ.ମି. ?

(A) $\frac{am}{n}$

(B) $\frac{m}{an}$

(C) $\frac{an^2}{m^2}$

(D) $\frac{n^2}{am^2}$

(*Space For Rough Work*)

53. Given : $f(x) = 2x + 3,\ x \in R$. For what value of a, $f\left(\frac{1}{a}\right) = -5$?

(A) $+\frac{1}{4}$

(B) $-\frac{1}{4}$

(C) $+\frac{1}{2}$

(D) $-\frac{1}{2}$

53. ଦତ୍ତ ଅଛି : $f(x) = 2x + 3,\ x \in R$ । a ର କେଉଁ ମାନ ପାଇଁ $f\left(\frac{1}{a}\right)$ ର ମାନ -5 ହେବ ?

(A) $+\frac{1}{4}$

(B) $-\frac{1}{4}$

(C) $+\frac{1}{2}$

(D) $-\frac{1}{2}$

54. A lady paid 36 rupees to a boy and sent her to the market to buy mangoes. The boy bought mangoes for the money he took and ate one of them. Then he gave the rest to the lady. If a mango costs 50 paise more to the lady than what was actually paid for it, then how many mangoes the boy bought for 36 rupees ?

(A) 9

(B) 8

(C) 7

(D) 6

54. ଜଣେ ମହିଳା ଗୋଟିଏ ବାଳକକୁ 36 ଟଙ୍କା ଦେଇ ଆମ୍ବ ଆଣିବାକୁ ବଜାରକୁ ପଠାଇଲେ । ପିଲାଟି ସେହି ଟଙ୍କାରେ ଆମ୍ବ କିଣିସାରି ସେଥିରୁ ଗୋଟିଏ ଖାଇଦେଲା ଓ ଅବଶିଷ୍ଟ ଆମ୍ବକୁ ଉକ୍ତ ମହିଳାଙ୍କୁ ଦେଲା । ଏହା ଦ୍ୱାରା ମହିଳାଙ୍କୁ ଆମ୍ବ ପ୍ରତି ପ୍ରକୃତ ଦାମଠାରୁ 50 ପଇସା ଅଧିକା ପଡ଼ିଲା । ତେବେ ପିଲାଟି ବଜାରରୁ 36 ଟଙ୍କା ଦେଇ କେତେଟି ଆମ୍ବ କିଣିଥିଲା ?

(A) 9

(B) 8

(C) 7

(D) 6

(*Space For Rough Work*)

55. The centre of the circle ABC is O and $OABC$ is a rhombus. If the area of the rhombus is $2\sqrt{3}$ cm^2, what is the diameter of circle ABC ?

(A) $\frac{\sqrt{3}}{2}$ cm

(B) $\frac{2}{\sqrt{3}}$ cm

(C) 2 cm

(D) 4 cm

56. P is a point on one side of an equilateral triangle. What is the sum of the lengths of the perpendiculars drawn from P to the other two sides of the triangle if the length of each side of the triangle is $2\sqrt{3}$ cm ?

(A) 6 cm

(B) 3 cm

(C) $2\ (3+\sqrt{3})$ cm

(D) $\sqrt{3}\ (2+\sqrt{3})$ cm

55. ABC ବୃତ୍ତର କେନ୍ଦ୍ର O ଏବଂ $OABC$ ଏକ ରମ୍ବସ୍ । ରମ୍ବସ୍‌ର କ୍ଷେତ୍ରଫଳ $2\sqrt{3}$ ବର୍ଗ ସେ.ମି. ହେଲେ, ABC ବୃତ୍ତର ବ୍ୟାସ କେତେ ?

(A) $\frac{\sqrt{3}}{2}$ ସେ.ମି.

(B) $\frac{2}{\sqrt{3}}$ ସେ.ମି.

(C) 2 ସେ.ମି.

(D) 4 ସେ.ମି.

56. $2\sqrt{3}$ ସେ.ମି. ଦୀର୍ଘ ବାହୁ ବିଶିଷ୍ଟ ଏକ ସମବାହୁ ତ୍ରିଭୁଜର ଗୋଟିଏ ବାହୁ ଉପରିସ୍ଥ ଏକ ବିନ୍ଦୁ P ଠାରୁ ଅନ୍ୟ ଦୁଇ ବାହୁ ପ୍ରତି ଅଙ୍କିତ ଲମ୍ବଦ୍ୱୟର ଦୈର୍ଘ୍ୟର ସମଷ୍ଟି କେତେ ?

(A) 6 ସେ.ମି.

(B) 3 ସେ.ମି.

(C) $2\ (3+\sqrt{3})$ ସେ.ମି.

(D) $\sqrt{3}\ (2+\sqrt{3})$ ସେ.ମି.

(*Space For Rough Work*)

57. How many spheres of largest possible size can be obtained in maximum from a wooden cuboid of dimension 44 cm × 7 cm × 3 cm ?

(A) 25

(B) 28

(C) 32

(D) 35

57. 44 ସେ.ମି. × 7 ସେ.ମି. × 3 ସେ.ମି. ବିସ୍ତୃତି ବିଶିଷ୍ଟ ଏକ କାଠ ତିଆରି ଆୟତଘନରୁ ବୃହତ୍ତମ ସମ୍ଭବ ସର୍ବାଧିକ କେତେଟି ଗୋଲକ ପ୍ରସ୍ତୁତ ହୋଇ ପାରିବ ?

(A) 25

(B) 28

(C) 32

(D) 35

58. The radius of a cylinder is 8 cm and its height is 3 cm. By how many centimeters should either the radius or the height be increased so that the increase in the volume remains the same ?

(A) $5\frac{1}{3}$

(B) $3\frac{1}{3}$

(C) $5\frac{1}{5}$

(D) $3\frac{1}{5}$

58. 8 ସେ.ମି. ବ୍ୟାସାର୍ଦ୍ଧ ଓ 3 ସେ.ମି. ଉଚ୍ଚତା ବିଶିଷ୍ଟ ଏକ ସିଲିଣ୍ଡର୍‌ର ବ୍ୟାସାର୍ଦ୍ଧ ଅଥବା ଉଚ୍ଚତାକୁ କେତେ ସେଣ୍ଟିମିଟର ବଢାଇଦେଲେ, ପ୍ରତ୍ୟେକ କ୍ଷେତ୍ରରେ ସିଲିଣ୍ଡର୍‌ର ଆୟତନରେ ସମାନ ପରିମାଣର ବୃଦ୍ଧି ଘଟିବ ?

(A) $5\frac{1}{3}$

(B) $3\frac{1}{3}$

(C) $5\frac{1}{5}$

(D) $3\frac{1}{5}$

(*Space For Rough Work*)

59. In the right triangle ABC, $AB = AC =$ 7 cm. An arc with centre A is drawn touching $\overline{BC}$. If the end points P and Q of the arc lie on $\overline{AB}$ and $\overline{AC}$, what area in cm^2 is enclosed between the arc and the radii $\overline{AP}$ and $\overline{AQ}$?

(A) 15.5
(B) 17.5
(C) 19.25
(D) 21.25

60. What is the ratio between the length of a side of an equilateral triangle inscribed in a circle and the length of a side of a square circumscribed about the same circle ?

(A) $\frac{\sqrt{3}}{2}$

(B) $\frac{3}{\sqrt{2}}$

(C) $\frac{\sqrt{2}}{3}$

(D) $\frac{2}{\sqrt{3}}$

59. ABC ସମକୋଣୀ ତ୍ରିଭୁଜର $AB = AC =$ 7 ସେ.ମି.। A କୁ କେନ୍ଦ୍ର କରି ଅଙ୍କିତ ଚାପ $\overline{BC}$ କୁ ସ୍ପର୍ଶ କରେ । ଉକ୍ତ ଚାପର ପ୍ରାନ୍ତ ବିନ୍ଦୁ P ଓ Q ଯଥାକ୍ରମେ $\overline{AB}$ ଓ $\overline{AC}$ ଉପରେ ଅବସ୍ଥିତ ହେଲେ, ସେହି ଚାପ ଓ ତା'ର ବ୍ୟାସାର୍ଦ୍ଧ $\overline{AP}$ ଓ $\overline{AQ}$ ଦ୍ୱାରା ଆବଦ୍ଧ କ୍ଷେତ୍ରର କ୍ଷେତ୍ରଫଳ କେତେ ବର୍ଗ ସେ.ମି. ?

(A) 15.5
(B) 17.5
(C) 19.25
(D) 21.25

60. ଗୋଟିଏ ବୃତ୍ତର ଅନ୍ତର୍ଲିଖିତ ସମବାହୁ ତ୍ରିଭୁଜର ଗୋଟିଏ ବାହୁର ଦୈର୍ଘ୍ୟ ଓ ସେହି ବୃତ୍ତର ପରିଲିଖିତ ବର୍ଗଚିତ୍ରର ଗୋଟିଏ ବାହୁର ଦୈର୍ଘ୍ୟର ଅନୁପାତ କେତେ ?

(A) $\frac{\sqrt{3}}{2}$

(B) $\frac{3}{\sqrt{2}}$

(C) $\frac{\sqrt{2}}{3}$

(D) $\frac{2}{\sqrt{3}}$

(*Space For Rough Work*)

61. A test was given to the two sections A and B of a class. The average score of 20 students of section A was 80% and the average score of 30 students of section B was 10% less than the average of section A. What is the average percentage of the whole class ?

(A) 74

(B) 72

(C) 70

(D) 68

61. ଗୋଟିଏ ଶ୍ରେଣୀର ଦୁଇଟି ସେକ୍ସନ୍ A ଓ B ରେ ଗୋଟିଏ ପରୀକ୍ଷା କରାଯାଇଥିଲା । A ସେକ୍ସନ୍‌ରେ ଥିବା 20 ଜଣ ଛାତ୍ରଙ୍କର ହାରାହାରି ନମ୍ବର ଥିଲା 80% । B ସେକ୍ସନ୍‌ର 30 ଜଣ ଛାତ୍ରଙ୍କର ହାରାହାରି ନମ୍ବର A ସେକ୍ସନ୍‌ର ହାରାହାରି ନମ୍ବର ଠାରୁ 10% କମ୍ ହେଲେ, ପୂରା ଶ୍ରେଣୀର ହାରାହାରି ନମ୍ବର ଶତକଡ଼ା କେତେ ?

(A) 74

(B) 72

(C) 70

(D) 68

62. If 20 is the mean of the scores $x_1, x_2, x_3, \ldots$ 16 in number, then what is $\sum_{i=1}^{16}(x_i - 18)$ equal to ?

(A) 36

(B) 34

(C) 32

(D) 30

62. $x_1, x_2, x_3, \ldots$ ଆଦି 16 ଗୋଟି ଲବ୍‌ଧାଙ୍କର ମାଧ୍ୟମାନ 20 ହେଲେ, $\sum_{i=1}^{16}(x_i - 18)$ ର ମାନ କେତେ ?

(A) 36

(B) 34

(C) 32

(D) 30

(*Space For Rough Work*)

63. When one pair alternate sides of a regular polygon were extended, they met at an angle of measure 108°. What is the number of sides of the polygon?

(A) 10

(B) 8

(C) 6

(D) 5

63. ଏକ ସୁଷମ ବହୁଭୁଜର ଗୋଟିଏ ଛଡ଼ି ଗୋଟିଏ ବାହୁକୁ ବର୍ଦ୍ଧିତ କରିବାରୁ, ସେ ଦ୍ୱୟର ଛେଦବିନ୍ଦୁରେ ଉତ୍ପନ୍ନ ହେଉଥିବା କୋଣର ପରିମାଣ 108° ହେଲେ, ବହୁଭୁଜର ବାହୁ ସଂଖ୍ୟା କେତେ ?

(A) 10

(B) 8

(C) 6

(D) 5

64. E is a point on $\overline{BC}$ of a rectangle $ABCD$. If $AE = 25$cm, $DE = 26$ cm and $AD = 17$ cm, what is the length of $\overline{AB}$ in cm?

(A) 20

(B) 24

(C) 30

(D) 36

64. $ABCD$ ଆୟତଚିତ୍ରର $\overline{BC}$ ଉପରିସ୍ଥ E ଏକ ବିନ୍ଦୁ । $AE = 25$ ସେ.ମି., $DE = 26$ ସେ.ମି. ଏବଂ $AD = 17$ ସେ.ମି. ହେଲେ, $\overline{AB}$ ର ଦୈର୍ଘ୍ୟ କେତେ ସେ.ମି. ?

(A) 20

(B) 24

(C) 30

(D) 36

(*Space For Rough Work*)

65. In triangle ABC, $\angle ACB$ is a right angle. The perpendicular drawn to $\overline{AB}$ at its mid point D meets $\overline{BC}$ at E. If $AB = 20$ cm and $AC = 12$ cm, what is the area of the quadrilateral $ADEC$ in cm^2 ?

(A) 37.5

(B) 48

(C) 58.5

(D) 75

66. What is the inradius in cm of ΔABC in which $\angle BAC$ is a right angle, $AB = 8$ cm and $AC = 15$ cm ?

(A) 2

(B) 3

(C) 4

(D) 5

65. ABC ତ୍ରିଭୁଜର $\angle ACB$ ଏକ ସମକୋଣ ଏବଂ $\overline{AB}$ ପ୍ରତି ଏହାର ମଧ୍ୟ ବିନ୍ଦୁ D ଠାରେ ଅଙ୍କିତ ଲମ୍ବ $\overline{BC}$ କୁ E ବିନ୍ଦୁରେ ଛେଦ କରେ । $AB = 20$ ସେ.ମି. ଓ $AC = 12$ ସେ.ମି. ହେଲେ, $ADEC$ ଚତୁର୍ଭୁଜର କ୍ଷେତ୍ରଫଳ କେତେ ବର୍ଗସେ.ମି. ?

(A) 37.5

(B) 48

(C) 58.5

(D) 75

66. ΔABC ର $\angle BAC$ ଏକ ସମକୋଣ । $AB = 8$ ସେ.ମି. ଏବଂ $AC = 15$ ସେ.ମି. ହେଲେ, ΔABC ର ଅନ୍ତଃବ୍ୟାସାର୍ଦ୍ଧ କେତେ ସେ.ମି. ?

(A) 2

(B) 3

(C) 4

(D) 5

(*Space For Rough Work*)

67. Which of the following, when added to the antecedent and subtracted from the consequent of the ratio 5:13, changes it to 4 : 5 ?

(A) 4

(B) 3

(C) 2

(D) 1

68. If p, q, r and s are in continued proportion, which of the following is equal to $\frac{p}{s}$?

(A) $\frac{q^2}{r^2}$

(B) $\frac{q^2}{r^3}$

(C) $\frac{q^3}{r^2}$

(D) $\frac{q^3}{r^3}$

67. ନିମ୍ନସ୍ଥ କେଉଁ ସଂଖ୍ୟାକୁ 5:13 ଅନୁପାତର ପୂର୍ବ ପଦ ସହ ଯୋଗକଲେ ଏବଂ ପରପଦରୁ ବିୟୋଗ କଲେ, ପରିବର୍ତ୍ତିତ ଅନୁପାତଟି 4 : 5 ହେବ ?

(A) 4

(B) 3

(C) 2

(D) 1

68. p, q, r ଓ s କ୍ରମିକ ସମାନୁପାତୀ ହେଲେ, ନିମ୍ନସ୍ଥ କେଉଁଟି $\frac{p}{s}$ ସହ ସମାନ ?

(A) $\frac{q^2}{r^2}$

(B) $\frac{q^2}{r^3}$

(C) $\frac{q^3}{r^2}$

(D) $\frac{q^3}{r^3}$

(*Space For Rough Work*)

69. What is the number obtained if the digit k is placed between the two digits of a two-digit number with t as the ten's digit and u as the unit's digit ?

(A) $k + t + u$

(B) $10\,t + k + u$

(C) $100\,t + 10\,k + u$

(D) $10\,t + 100\,k + u$

70. If ₹ 4000 was distributed among P, Q and R such that twice the share of P, half the share of Q and two third of the share of R are equal, then how many rupees did R get more than P ?

(A) 500

(B) 750

(C) 1000

(D) 1500

69. ଗୋଟିଏ ଦୁଇ ଅଙ୍କ ବିଶିଷ୍ଟ ସଂଖ୍ୟାର ଦଶକ ଅଙ୍କ t ଓ ଏକକ ଅଙ୍କ u । ଦଶକ ଓ ଏକକ ଅଙ୍କଦ୍ୱୟ ମଧ୍ୟରେ ଅଙ୍କ k ବସାଇଲେ, ନୂତନ ସଂଖ୍ୟାଟି କେତେ ହେବ ?

(A) $k + t + u$

(B) $10\,t + k + u$

(C) $100\,t + 10\,k + u$

(D) $10\,t + 100\,k + u$

70. 4000 ଟଙ୍କାକୁ P, Q ଓ R ମଧ୍ୟରେ ଏପରି ଭାବରେ ବାଣ୍ଟିଦିଆଗଲା, ଯେପରି P ର ଭାଗର ଦୁଇଗୁଣ, Q ର ଭାଗର ଅଧା ଓ R ର ଭାଗର ଦୁଇତୃତୀୟାଂଶ ସମାନ ହେବ । ତେବେ P ଅପେକ୍ଷା R କେତେ ଟଙ୍କା ଅଧିକ ପାଇଲା ?

(A) 500

(B) 750

(C) 1000

(D) 1500

(*Space For Rough Work*)

71. Which are the roots of the equation $x(x^2-8x+15)=0$?

(A) +3, −5

(B) −3, +5

(C) 0, −3, +5

(D) 0, +3, +5

72. A picnic party hired some taxies. When 4 of them shared a taxi, then 5 could not be accommodated. When 5 shared a taxi, then only one was to move in the last taxi. What was number of persons in the party ?

(A) 9

(B) 29

(C) 31

(D) 41

71. ସମୀକରଣ $x(x^2-8x+15)=0$ ର ମୂଳ-ଗୁଡ଼ିକ କିଏ ?

(A) +3, −5

(B) −3, +5

(C) 0, −3, +5

(D) 0, +3, +5

72. ଦଣଭୋଜୀ କରିବାକୁ ଯାଉଥିବା କେତେକ ବ୍ୟକ୍ତି ଭଡ଼ା ଆଣିଥିବା ପ୍ରତ୍ୟେକ ଟ୍ୟାକ୍ସିରେ 4 ଜଣ ଲେଖାଏଁ ଗଲେ, 5 ଜଣ ବଳିପଡ଼ନ୍ତି । ପ୍ରତି ଗାଡ଼ିରେ 5 ଜଣ ଲେଖାଏଁ ଗଲେ, ଶେଷ ଗାଡ଼ିରେ କେବଳ ଜଣେ ବ୍ୟକ୍ତିଙ୍କୁ ଯିବାକୁ ପଡ଼େ । ତେବେ ସେ ଦଳରେ ଥିବା ଲୋକ ସଂଖ୍ୟା କେତେ ?

(A) 9

(B) 29

(C) 31

(D) 41

(*Space For Rough Work*)

73. If $\frac{xy}{x+y} = a$, $\frac{yz}{y+z} = b$ and $\frac{zx}{z+x} = c$, where a, b, c are non-zero numbers, what is the value of x ?

(A) $\frac{2abc}{ab+bc+ca}$

(B) $\frac{2abc}{ab+bc-ca}$

(C) $\frac{abc}{ab+bc+ca}$

(D) $\frac{abc}{ab+bc-ca}$

73. ଯଦି $\frac{xy}{x+y} = a$, $\frac{yz}{y+z} = b$ ଏବଂ $\frac{zx}{z+x} = c$ ହୁଏ, ଯେଉଁଠି a, b ଓ c ଅଣଶୂନ ସଂଖ୍ୟା, ତେବେ x ର ମାନ କେତେ ?

(A) $\frac{2abc}{ab+bc+ca}$

(B) $\frac{2abc}{ab+bc-ca}$

(C) $\frac{abc}{ab+bc+ca}$

(D) $\frac{abc}{ab+bc-ca}$

(*Space For Rough Work*)

74. If $y^2 - 1 = \frac{x+2}{x-1}$, then which of the following is equal to x ?

(A) $\frac{y^2+1}{y^2+2}$

(B) $\frac{y^2+1}{y^2-2}$

(C) $\frac{y^2-1}{y^2+2}$

(D) $\frac{y^2-1}{y^2-2}$

74. $y^2 - 1 = \frac{x+2}{x-1}$ ହେଲେ, ନିମ୍ନସ୍ଥ କେଉଁଟି x ସହ ସମାନ ?

(A) $\frac{y^2+1}{y^2+2}$

(B) $\frac{y^2+1}{y^2-2}$

(C) $\frac{y^2-1}{y^2+2}$

(D) $\frac{y^2-1}{y^2-2}$

75. What is the difference between the roots of the equation $9 + 7x - 2x^2 = 0$?

(A) $2\frac{1}{2}$

(B) 4

(C) $5\frac{1}{2}$

(D) 7

75. $9 + 7x - 2x^2 = 0$ ସମୀକରଣର ମୂଳଦ୍ୱୟର ପାର୍ଥକ୍ୟ କେତେ ?

(A) $2\frac{1}{2}$

(B) 4

(C) $5\frac{1}{2}$

(D) 7

(*Space For Rough Work*)

76. It is given that $\log 8 = 0.9031$ and $\log 9 = 0.9542$; then the logarithm of which of the following numbers cannot be determined without using the log-table ?

(A) 15

(B) 17

(C) 40

(D) 60

76. ଯଦି $\log 8 = 0.9031$ ଏବଂ $\log 9 = 0.9542$ ଦତ୍ତ ଥାଏ, ତେବେ ଲଗ୍-ଟେବ୍ଲ ନ ଦେଖି ନିମ୍ନସ୍ଥ କେଉଁ ସଂଖ୍ୟାର ଲଗାରିଦିମ୍ ନିର୍ଣ୍ଣୟ କରାଯାଇ ପାରିବ ନାହିଁ ?

(A) 15

(B) 17

(C) 40

(D) 60

77. For which of the following pairs of roots, the quadratic equation could take the form $\log_{10}(x^2 - 15x) = 2$?

(A) $-20, +5$

(B) $+20, -5$

(C) $+20, +5$

(D) $-20, -5$

77. ନିମ୍ନସ୍ଥ କେଉଁ ଯୋଡା ମୂଳ ଲାଗି, ଏକ ଦ୍ୱିଘାତ ସମୀକରଣର ରୂପ ହେବ $\log_{10}(x^2 - 15x) = 2$?

(A) $-20, +5$

(B) $+20, -5$

(C) $+20, +5$

(D) $-20, -5$

(*Space For Rough Work*)

78. If $\log \frac{x-y}{2} = \frac{1}{2}(\log x + \log y)$, then what is $x^2 + y^2$ equal to ?

(A) $4xy$

(B) $6xy$

(C) $\frac{xy}{4}$

(D) $\frac{xy}{6}$

78. $\log \frac{x-y}{2} = \frac{1}{2}(\log x + \log y)$ ହେଲେ, ନିମ୍ନସ୍ଥ କେଉଁଟି $x^2 + y^2$ ସହ ସମାନ ହେବ ?

(A) $4xy$

(B) $6xy$

(C) $\frac{xy}{4}$

(D) $\frac{xy}{6}$

79. Given $\log 2 = 0.3010$ and $\log 3 = 0.4771$; what is the value of $\log 0.36$?

(A) -1.4438

(B) -3.4438

(C) $\bar{1}.5562$

(D) $\bar{3}.5562$

79. ଦତ୍ତ : $\log 2 = 0.3010$, $\log 3 = 0.4771$; $\log 0.36$ର ମାନ କେତେ ?

(A) -1.4438

(B) -3.4438

(C) $\bar{1}.5562$

(D) $\bar{3}.5562$

(*Space For Rough Work*)

80. If $\log 16 = a$ and $\log 27 = b$, then what is $\log 72$ equal to ?

(A) $\frac{2a}{3} + \frac{3b}{4}$

(B) $\frac{3a}{2} + \frac{4b}{3}$

(C) $\frac{3a}{4} + \frac{2b}{3}$

(D) $\frac{4a}{3} + \frac{3b}{2}$

81. If $a^m = b^n = p$ and $b^x = a^y = q$, then which of the following is true ?

(A) $pq = mn + xy$

(B) $pq = mn - xy$

(C) $mx - ny = 0$

(D) $mx + ny = 0$

80. $\log 16 = a$ ଏବଂ $\log 27 = b$ ହେଲେ, $\log 72$ ର ମାନ କେତେ ?

(A) $\frac{2a}{3} + \frac{3b}{4}$

(B) $\frac{3a}{2} + \frac{4b}{3}$

(C) $\frac{3a}{4} + \frac{2b}{3}$

(D) $\frac{4a}{3} + \frac{3b}{2}$

81. $a^m = b^n = p$ ଏବଂ $b^x = a^y = q$ ହେଲେ, ନିମ୍ନସ୍ଥ କେଉଁଟି ଠିକ୍ ?

(A) $pq = mn + xy$

(B) $pq = mn - xy$

(C) $mx - ny = 0$

(D) $mx + ny = 0$

(*Space For Rough Work*)

82. Which of the following is equal to $\dfrac{x+y+z}{x^{-1}y^{-1}+y^{-1}z^{-1}+z^{-1}x^{-1}}$?

(A) $x^{-1}y^{-1}z^{-1}$

(B) xyz

(C) $x^{-1}+y^{-1}+z^{-1}$

(D) $x+y+z$

82. ନିମ୍ନସ୍ଥ କେଉଁଟି $\dfrac{x+y+z}{x^{-1}y^{-1}+y^{-1}z^{-1}+z^{-1}x^{-1}}$ ସହ ସମାନ ?

(A) $x^{-1}y^{-1}z^{-1}$

(B) xyz

(C) $x^{-1}+y^{-1}+z^{-1}$

(D) $x+y+z$

83. If $\sqrt{1+\sqrt{1+\sqrt{1+}}}....=x$, then which of the following is true ?

(A) $0<x<1$

(B) $1<x<2$

(C) $x>2$

(D) $x>3$

83. $\sqrt{1+\sqrt{1+\sqrt{1+}}}....=x$ ହେଲେ, ନିମ୍ନସ୍ଥ କେଉଁଟି ଠିକ୍ ?

(A) $0<x<1$

(B) $1<x<2$

(C) $x>2$

(D) $x>3$

(*Space For Rough Work*)

84. If $13^{\sqrt{x}} = 4^4 - 3^4 - 6$, what is the value of x ?

(A) 4

(B) 3

(C) 2

(D) 1

84. $13^{\sqrt{x}} = 4^4 - 3^4 - 6$ ହେଲେ, x ର ମାନ କେତେ ?

(A) 4

(B) 3

(C) 2

(D) 1

85. What will be the denominator in the simplest form of $\frac{2\sqrt{2}-\sqrt{3}}{\sqrt{6}}$ when the numerator is rationalised ?

(A) $2\sqrt{3}+3\sqrt{2}$

(B) $2\sqrt{3}-3\sqrt{2}$

(C) $4\sqrt{3}+3\sqrt{2}$

(D) $4\sqrt{3}-3\sqrt{2}$

85. $\frac{2\sqrt{2}-\sqrt{3}}{\sqrt{6}}$ ର ଲବକୁ ଏକ ପରିମେୟ ରାଶିରେ ପରିଣତ କଲେ, ଏହାର ହରର ସରଳୀକୃତ ମାନ କେତେ ହେବ ?

(A) $2\sqrt{3}+3\sqrt{2}$

(B) $2\sqrt{3}-3\sqrt{2}$

(C) $4\sqrt{3}+3\sqrt{2}$

(D) $4\sqrt{3}-3\sqrt{2}$

(*Space For Rough Work*)

86. If $f(x)=\frac{2x-1}{x+2}$, for what value of c, $f(c)$ will be undefined ?

(A) $\frac{1}{2}$

(B) $-\frac{1}{2}$

(C) 2

(D) -2

86. $f(x)=\frac{2x-1}{x+2}$ ହେଲେ, c ର କେଉଁ ମାନ ପାଇଁ $f(c)$ ସଂଜ୍ଞାବିହୀନ ହେବ ?

(A) $\frac{1}{2}$

(B) $-\frac{1}{2}$

(C) 2

(D) -2

87. If Q_1, Q_2, Q_3 and Q_4 represent the four quadrants in the R^2-plane, in which of the quadrants the graph of the function $y=|x|$ does not lie ?

(A) Q_1 and Q_2

(B) Q_2 and Q_3

(C) Q_3 and Q_4

(D) Q_4 and Q_1

87. R^2-ସମତଳର ଚାରୋଟି ପାଦକୁ Q_1, Q_2, Q_3 ଓ Q_4 ଦ୍ୱାରା ସୂଚାଇଲେ, $y=|x|$ ଫଳନର ଲେଖ କେଉଁ ପାଦରେ ରହିବ ନାହିଁ ?

(A) Q_1 ଓ Q_2

(B) Q_2 ଓ Q_3

(C) Q_3 ଓ Q_4

(D) Q_4 ଓ Q_1

(*Space For Rough Work*)

88. What is the maximum value of $2+3x-px^2$ where $p>0$?

(A) $\frac{2p+9}{8p}$

(B) $\frac{2p-9}{8p}$

(C) $\frac{8p+9}{4p}$

(D) $\frac{8p-9}{4p}$

89. If $6^p = 2^q = 3^r$, which of the following is equal to r^{-1} ?
(Given : p, q, r are non-zero numbers)

(A) $p^{-1}+q^{-1}$

(B) $p^{-1}-q^{-1}$

(C) pq^{-1}

(D) $p^{-1}q$

88. $p>0$ କ୍ଷେତ୍ରରେ $2+3x-px^2$ ର ସର୍ବାଧିକ ମାନ କେତେ ?

(A) $\frac{2p+9}{8p}$

(B) $\frac{2p-9}{8p}$

(C) $\frac{8p+9}{4p}$

(D) $\frac{8p-9}{4p}$

89. $6^p = 2^q = 3^r$ ହେଲେ, ନିମ୍ନସ୍ଥ କେଉଁଟି r^{-1} ସହ ସମାନ ?
(ଦତ୍ତ ଅଛି ଯେ p, q, r ଶୂନ ନୁହନ୍ତି)

(A) $p^{-1}+q^{-1}$

(B) $p^{-1}-q^{-1}$

(C) pq^{-1}

(D) $p^{-1}q$

(*Space For Rough Work*)

90. If the sum of $(1010100)_2$ and $(1001000)_2$ is divided by their difference, what will be the quotient ?

(A) 1011

(B) 1101

(C) 1100

(D) 1001

90. $(1010100)_2$ ଓ $(1001000)_2$ ର ଯୋଗଫଳକୁ ସେହି ସଂଖ୍ୟା ଦୁଇଟିର ବିୟୋଗ-ଫଳ ଦ୍ୱାରା ଭାଗକଲେ, ଭାଗଫଳ କେତେ ହେବ ?

(A) 1011

(B) 1101

(C) 1100

(D) 1001

91. What is the binary number equal to product of $(10000)_2$ and $(11)_{10}$

(A) 10110000

(B) 10101000

(C) 110000

(D) 100001

91. $(10000)_2$ ଓ $(11)_{10}$ ର ଗୁଣଫଳ ଦ୍ୱିକ ପଦ୍ଧତିରେ କେତେ ହେବ ?

(A) 10110000

(B) 10101000

(C) 110000

(D) 100001

(*Space For Rough Work*)

92. What is the value of $p+q$ if each of $x-2$ and $x+3$ is a factor of $x^3+px^2+qx-12$?

(A) $+1$

(B) -1

(C) $+2$

(D) -2

92. $x-2$ ଓ $x+3$ ପ୍ରତ୍ୟେକ $x^3+px^2+qx-12$ ର ଏକ ଉତ୍ପାଦକ ହେଲେ, $p+q$ ର ମାନ କେତେ ?

(A) $+1$

(B) -1

(C) $+2$

(D) -2

93. If $a^2-3a+1=0$, what is the value of $a^3+\frac{1}{a^3}$?

(A) 9

(B) 12

(C) 18

(D) 21

93. $a^2-3a+1=0$ ହେଲେ, $a^3+\frac{1}{a^3}$ ର ମାନ କେତେ ?

(A) 9

(B) 12

(C) 18

(D) 21

(*Space For Rough Work*)

94. For which of the following values of a, polynomial $21x^2 + ax + 21$ gives two linear prime binomial factors ?

(A) 58

(B) –58

(C) 84

(D) –84

95. If $r^2 \neq -1$, for what value of $\left(r + \frac{1}{r}\right)^2$, $r^3 + \frac{1}{r^3}$ will be equal to zero ?

(A) 0

(B) 1

(C) 2

(D) 3

94. a ର ନିମ୍ନସ୍ଥ କେଉଁ ମାନ ପାଇଁ ପଲିନୋମିଆଲ୍ $21x^2 + ax + 21$ ର ଉତ୍ପାଦକୀକରଣରେ ଦୁଇଗୋଟି ଏକଘାତୀ ମୌଳିକ ଦୁଇପଦୀ ଉତ୍ପାଦକ ମିଳିବ ?

(A) 58

(B) –58

(C) 84

(D) –84

95. ଯଦି $r^2 \neq -1$ ହୁଏ, ତେବେ $\left(r + \frac{1}{r}\right)^2$ ର କେଉଁ ମାନ ପାଇଁ, $r^3 + \frac{1}{r^3}$ ର ମାନ ଶୂନ ହେବ ?

(A) 0

(B) 1

(C) 2

(D) 3

(*Space For Rough Work*)

96. Which of the following is the real factorisation of $4x^4 + 1$?

(A) $(2x^2 + x - 1)\ (2x^2 - x + 1)$

(B) $(2x^2 + x - 1)\ (2x^2 - x - 1)$

(C) $(2x^2 + 2x + 1)\ (2x^2 - 2x + 1)$

(D) $(2x^2 + 2x + 1)\ (2x^2 + 2x - 1)$

96. ନିମ୍ନସ୍ଥ କେଉଁଟି $4x^4 + 1$ର ବାସ୍ତବ ଉତ୍ପାଦକୀ-କରଣ ?

(A) $(2x^2 + x - 1)\ (2x^2 - x + 1)$

(B) $(2x^2 + x - 1)\ (2x^2 - x - 1)$

(C) $(2x^2 + 2x + 1)\ (2x^2 - 2x + 1)$

(D) $(2x^2 + 2x + 1)\ (2x^2 + 2x - 1)$

97. Which is the largest number by which the polynomial $m^3 - m$ is divisible for all possible integral values of m ?

(A) 4

(B) 6

(C) 8

(D) 9

97. m ଲାଗି ସମସ୍ତ ପୂର୍ଣ୍ଣ ସଂଖ୍ୟା ମାନ ପାଇଁ $m^3 - m$ କେଉଁ ବୃହତ୍ତମ ସଂଖ୍ୟା ଦ୍ୱାରା ବିଭାଜ୍ୟ ହେବ ?

(A) 4

(B) 6

(C) 8

(D) 9

(*Space For Rough Work*)

98. Which of the following is not equal to a terminating decimal ?

(A) $\frac{5}{64}$

(B) $\frac{6}{192}$

(C) $\frac{7}{96}$

(D) $\frac{21}{224}$

98. ନିମ୍ନସ୍ଥ କେଉଁଟି ଏକ ସସୀମ ଦଶମିକ ସଂଖ୍ୟା ନୁହେଁ ?

(A) $\frac{5}{64}$

(B) $\frac{6}{192}$

(C) $\frac{7}{96}$

(D) $\frac{21}{224}$

99. Which of the following is an irrational number between $\sqrt{2}$ and $\sqrt{3}$?

(A) $\frac{\sqrt{17}}{3}$

(B) $\frac{\sqrt{21}}{3}$

(C) $\frac{\sqrt{30}}{4}$

(D) $\frac{\sqrt{50}}{4}$

99. ନିମ୍ନସ୍ଥ କେଉଁଟି $\sqrt{2}$ ଓ $\sqrt{3}$ ମଧ୍ୟବର୍ତ୍ତୀ ଏକ ଅପରିମେୟ ସଂଖ୍ୟା ?

(A) $\frac{\sqrt{17}}{3}$

(B) $\frac{\sqrt{21}}{3}$

(C) $\frac{\sqrt{30}}{4}$

(D) $\frac{\sqrt{50}}{4}$

(*Space For Rough Work*)

100. If $\frac{a+b}{a-b}=11$, what is $\frac{5a-4b+3}{5a+4b+15}$ equal to ?

(A) $\frac{1}{3}$

(B) $\frac{2}{3}$

(C) $\frac{1}{5}$

(D) $\frac{2}{5}$

100. $\frac{a+b}{a-b}=11$ ହେଲେ, $\frac{5a-4b+3}{5a+4b+15}$ ର ମାନ କେତେ ?

(A) $\frac{1}{3}$

(B) $\frac{2}{3}$

(C) $\frac{1}{5}$

(D) $\frac{2}{5}$

(*Space For Rough Work*)

Answer to set code - 4 of DET-2012 (1st semester of 3 yrs Diploma course)

ON TO 1ST SEMESTER)

SET-4	
Q.No.	Answer
1	B
2	C
3	D
4	A
5	B
6	C
7	D
8	C
9	C
10	A
11	D
12	C
13	B
14	A
15	C
16	C
17	C
18	B
19	C
20	B
21	A
22	D
23	A
24	B
25	D
26	C
27	B
28	B
29	A
30	C
31	D
32	B
33	D
34	C
35	A
36	C
37	B
38	B
39	B
40	C
41	D
42	B
43	C
44	B
45	B
46	D
47	D
48	B
49	D
50	C

Contd -

DET-2012 set code-4 contd - 1st semester of 3 yrs Diploma courses

1ST SEMESTER)

SET-4	
Q.No.	Answer
51	D
52	C
53	B
54	A
55	D
56	B
57	B
58	A
59	C
60	A
61	A
62	C
63	A
64	B
65	C
66	B
67	B
68	D
69	C
70	C
71	D
72	D
73	D
74	B
75	C
76	B
77	B
78	B
79	C
80	C
81	C
82	B
83	B
84	A
85	C
86	D
87	C
88	C
89	B
90	B
91	A
92	B
93	C
94	A
95	D
96	C
97	B
98	C
99	B
100	C